Export
& CUSTOMS
CLEARANCE
MEDIHANDS NITRILE GLOVES
Supporting Documents
Customs Clearance Copy

Product Sourcing from Asia.

The purpose of this document is to provide the authorities & institutions all the information needed about the order placed by our client.

Documents prepared here are for official use, for the purpose of shipping medical goods from manufacture via the exporter to the customer in Germany.

You will find the following details within this pack:

1. Business Engagements Documents (LOI, Term Sheets, Quotations, Proforma Invoice)
2. Business Registration Certificates
3. Import/Export Licences
4. Product Certifications
5. Product Specifications
6. Product Image
7. Packaging Images
8. Shipping Packaging Images

Overview

The following parties are involved:

Party	Role	Location
Medihands Co., Ltd	Buyer	Thailand
GAIA Corporation(Thailand) Ltd.	Suppplier	Thailand
ASCENT PARVE NU Co.,Ltd	Exporter	Thailand
SGMP Co.,Ltd	Manufacture	Thailand

Contact Details

The following parties are represented by the following:

Medihands
Mr.John
Email:John.arnott@medihands.ch
Address: Caledariaweg 2,
Immense, 6405 Switzerland

GAIACorporation(Thailand)Co.,Ltd
Mr Shuichi Ozawa
712 / 1 TBI Building, Unit 502, 5th Floor, Soi Sukhumvit 26 and 28,Sukhumvit Rd., Khlong Tan, Khlong Toei, Bangkok 10110
Tel. (+66)2-120-6328 Web:https://gaiacorp.com /en/
Email: legal@gaiacorp.com Web:https://rise-holdings.com

SGMP Co.,Ltd.
181 Moo 6, Tambol,
Kampaengpetch,Rattaphm,
Songkhla 90180, Thailand.

ASCENT PARVE NU Co.,Ltd
55/39 Moo 10 TAMDOL NAKHON SAWA
Sawan Province 60000 Thailand

CONFIDENTIALITY.

The parties hereto agree that each shall treat confidentially the terms and conditions of this Agreement and all information provided by each party to the other regarding its business and operations.

All confidential information provided by a party hereto shall be used by any other party hereto solely for the purpose of rendering or obtaining services pursuant to this Agreement and, except as may be required in carrying out this Agreement, shall not be disclosed to any third party without the prior consent of such providing party.

The foregoing shall not be applicable to any information that is publicly available when provided or thereafter becomes publicly available other than through a breach of this Agreement, or that is required to be disclosed by or to any bank examiner of the Custodian or any Sub custodian, any Regulatory Authority, any auditor of the parties hereto, or by judicial or administrative process or otherwise by Applicable Law.

Business Registration

No. 10031720000152

Bangkok Partnerships and Companies Registration Office
Department of Business Development
Ministry of Commerce

CERTIFICATE

This is to certify that this company has been registered as a juristic person under the Civil and Commercial Code, on 26 October B.E. 2553 (2010), with the Juristic Person Registration Number 0105553132320. The particulars as shown in the Register of Juristic Person as of the date of issuance of this Certificate are as follows:

1. Name of the Company: GAIA CORPORATION (THAILAND) LIMITED
2. The Company has 1 director(s) named below:
   1. Mr. Shuiji Ozawa
3. The Number or name(s) of director(s) authorized to enter signature(s) binding the company is/are as follows: One director signs his/her name with the company's common seal being affixed.
4. The registered capital is 10,000,000.00 Baht. (Ten Million Baht Only)
5. Head office is located at No. 712/1, TBI Tower, Sukhumvit 26 and 28 Road, Khlong Tan Sub-district, Khlong Toei District, Bangkok.

Issued on 1 Sep B.E. 2563 (2020)

Monthicha C.

(Mrs. Monthicha Chancharaswat)
Registrar

Caution : Users should always read notes at the end of this Certificate carefully.

USE FOR SPA ONLY
日本国
JAPAN
旅券 PASSPORT
P
JPN
TS0639864
OZAWA
SHUICHI
JAPAN
27 JUN 1980
M
KANAGAWA
07 MAY 2018
01 FEB 2027
USE FOR SPA ONLY
P<JPNOZAWA<<SHUICHI<<<<<<<<<<<<<<<<<<<<<<<<
TS0639864 5JPN8006271M2702010<<<<<<<<<<<<<<02

SGMP Company Limited
บริษัท เอสจีเอ็มพี จำกัด
181 Moo 6, Tambol Kampaengphet, Amphur Rattaphum, Songkhla 90180 Thailand, Tel: (074) 894065-6, Fax: (074) 498595
เอชที่ 181 หมู่ที่ 6 ตำบลกำแพงเพชร อำเภอรัตภูมิ จังหวัดสงขลา 90180 โทร. (074) 894065-6 แฟกซ์ (074) 498595

SAFETY DATA SHEET

SECTION 1 : IDENTIFICATION

PRODUCT NAME: Non- Sterile Powder Free Nitrile Blue Examination Gloves
APPLICATION: Hand Protection Barrier Against Infectious Diseases
CHEMICAL FAMILY: Essentially Hydrocarbon

MANUFACTURER: SGMP Company Limited
ADDRESS: 181 Moo 6, Tambol Kampaengphet, Ampur Rattaphum, Songkhla 90180 Thailand

TELEPHONE : Tel : (074) 94065-6
FAX : Tel : (074) 98595

EMERGENCY PHONE NUMBER(S)
Tel : (074) 94065-6

SECTION 2 : HAZARD(S) IDENTIFICATION

Not a hazardous substance or mixture

SECTION 3 : COMPOSITION/ INFORMATION ON INGREDIENTS

INGREDIENT NAME	PERCENTAGE:	CAS NO
Carboxylated Acrylonitrile Butadiene Polymer	>=ca. 90 %	9010-81-5
Zinc Oxide	ca. 0.2/1.5 %	1314-13-2
Zinc Diethyldithiocarbamate	ca. 0.5/1.0 %	14324-55-1
Potassium Hydroxide	ca. 0/0.8 %	1310-58-3
Ammonia	ca. 0.3/1.0 %	1336-21-6
Sulphur	ca. 1.0/2.5 %	7704-34-9
Blue Dye	ca. 0.05/1.5 %	147-14-8
Titanium Dioxide	ca. 2.0/5.0 %	13463-67-7
Chlorine	ca.<0.05%	7782-50
Polyoxyethylene glycol	ca.0.05%	25322-88-3
Organic Polymer	ca.1.4%	57-11-4
Calcium Nitrate	ca. 0.5%	10124-37-5

SECTION 4 : FIRST-AID MEASURES

EMERGENCY AND FIRST AID PROCEDURES: If reaction in the form of skin irritation is noticed remove gloves immediately and wash affected part with saline water. If there is no relief, seek medical attention

The information contained herein is based on the data available to us and is believed to be correct as of the date prepared. However, **SGMP Company Limited** makes no warranty, expressed or implied regarding the accuracy of these data. This document becomes applicable with effect from Oct 2017 revision 09

SGMP Company Limited
บริษัท เอสจีเอ็มพี จำกัด
151 Moo 6, Tambol Kampaengphet, Amphur Rattaphum, Songkhla 90180 Thailand. Tel: (074) 394065-6, Fax: (074) 498595
เลขที่ 151 หมู่ที่ 6 ตำบลกำแพงเพชร อำเภอรัตภูมิ จังหวัดสงขลา 90180 โทร. (074) 394065-6 แฟกซ์ (074) 498595

SECTION 10 : STABILITY AND REACTIVITY

STABILITY:	Stable
INCOMPATIBILITY:	Highly polar solvents like methyl ethyl ketone , acetone, etc
HAZARDOUS DECOMPOSITION PRODUCTS:	By fire: Carbon Dioxide, Carbon Monoxide, Oxides of Nitrogen, aromatic/aliphatic hydrocarbons
HAZARDOUS POLYMERISATION:	Will not occur.

SECTION 11 : TOXICOLOGICAL INFORMATION

Not components included this classification

SECTION 12 : ECOLOGICAL INFORMATION (NON-MANDATORY)

No data available.

SECTION 13 : DISPOSAL CONSIDERATIONS (NON-MANDATORY)

No data available.

SECTION 14 : TRANSPORT INFORMATION (NON-MANDATORY

No data available.

SECTION 15 : REGULATORY INFORMATION (NON-MANDATORY)

No data available.

SECTION 16 : OTHER INFORMATION

Conformity :

- EN 455
- ASTM D6319

The information contained herein is based on the data available to us and is believed to be correct as of the date prepared. However, **SGMP Company Limited** makes no warranty, expressed or implied regarding the accuracy of these data. This document becomes applicable with effect from Oct 2017 revision 09

SGMP Company Limited
บริษัท เอสจีเอ็มพี จำกัด
181 Moo 6, Tambol Kampaengphet, Amphur Rattaphum, Songkhla 90180 Thailand. Tel: (074) 894065-6, Fax: (074) 498595
เลขที่ 181 หมู่ที่ 6 ตำบลคำแพงเพชร อำเภอรัตภูมิ จังหวัดสงขลา 90180 ไทย. (074) 894065-6 แฟกซ์ (074) 498595

DECLARATION OF CONFORMITY

Product Name	:	Nitrile Examination Gloves (Non-Sterile)
Type	:	Ambidextrous Powder-Free Black, White & Blue
Manufacturer's Name	:	S G M P Company Limited
Manufacturer's Address	:	181 Moo 6, Tambol Kampaengphet Amphur Rattaphum, Songkhla 90180 Thailand
Document No.	:	SGMP-CE-DC-NITRILE-001
Classification	:	Class I
Brand	:	Sunrise Nitrile Examination Gloves Sunrise Latex Examination Gloves

I, the undersign, hereby declare that the medical device(s) specified above conforms to the Essential Requirements listed in Annex VII of Medical Devices Directive (MDD) 93/42/ECC and bears the mark

CE

This Declaration of Conformity is valid in connection with the release document for the respective batch produced devices. The above-mentioned declaration of conformity is under the responsibility of Manufacturer.

Danny Chiong
RAQA Officer

SGMP Company Limited
26 June 2020

CONFIDENTIAL

Product Certificates

Here attached are the supporting documents, each heading stated for the document presented.

CE Certificate

SATRA TECHNOLOGY

Issued to:

SGMP Company Limited
181 Moo6
Tambol Kampaenghet
Amphur Rattaphum
Songkhla 90180
Thailand

Notified Body: 2777

SATRA customer number: P1643

EU Type-Examination Certificate

Certificate number: 2777/14166-01/E00-00

This EU Type-Examination Certificate covers the following product group(s) supported by testing to the relevant standards/technical specifications and examination of the technical file documentation:
Following the EU Type-Examination this product group has been shown to satisfy the applicable essential health and safety requirements of Annex II of the PPE Regulation (EU) 2016/425 as a Category III product.

Product reference:

PF NBR 8mil

Description:

Powder free Nitrile Glove, 8mil with Pattern texture available in Black, Orange, Green and Yellow colours.

Sizes:

Medium – 5558PF-M
Large – 5558PF-L
X-Large – 5558PF-XL
XX-Large – 5558PF-XXL

Classification:

EN ISO 374-1:2016/ Type C	Level	EN 374-4: 2013 Degradation %
n-Heptane (J)	2	27
40% Sodium Hydroxide (K)	6	-58.7
96% Sulphuric Acid (L)	0	100.0

EN ISO 374-5: 2016	Result
Protection against bacteria and fungi	Pass
Protection against viruses	N/A

Standards/Technical specifications applied:
EN 420: 2003+A1: 2009; EN 388:2016+A1:2018; EN ISO 374-1:2016+A1:2018

Technical reports/Approval documents:
SATRA: SPC0247447/1626/2, CHM0247460/1626/EN/B, CHM0260647/1731/EN, CHM0262288/1738/SMcD/B, SPC0262693/1740, CHM0262288/1738/SMcD/A

Signed on behalf of SATRA: Besjana Pilinci Quincey Brown

Date first issued: 26/02/2020
Date of issue: 26/02/2020

Expiry date: 26/02/2025

Page 1 of 2

SATRA Technology Europe Limited, Bracetown Business Park, Clonee, D15YN2P, Republic of Ireland.

Attachment 2

DEPARTMENT OF HEALTH & HUMAN SERVICES

Public Health Service

Food and Drug Administration
10903 New Hampshire Avenue
Document Control Room –WO66-G609
Silver Spring, MD 20993-0002

SEP 08 2010

SGMP Company, Limited
C/O Ms. Janna P. Tucker
Tucker & Associates
198 Avenue De La D'Emerald
Sparks, Nevada 89434

DL D105551

K101646

Re: K101646
Trade/Device Name: Non-Sterile, Powder Free Black Nitrile Examination Gloves with Cherry Flavor
Regulation Number: 21 CFR 880.6250
Regulation Name: Patient Examination Glove
Regulatory Class: I
Product Code: LZA
Dated: June 10, 2010
Received: June 11, 2010

Dear Ms. Tucker:

We have reviewed your Section 510(k) premarket notification of intent to market the device referenced above and have determined the device is substantially equivalent (for the indications for use stated in the enclosure) to legally marketed predicate devices marketed in interstate commerce prior to May 28, 1976, the enactment date of the Medical Device Amendments, or to devices that have been reclassified in accordance with the provisions of the Federal Food, Drug, and Cosmetic Act (Act) that do not require approval of a premarket approval application (PMA). You may, therefore, market the device, subject to the general controls provisions of the Act. The general controls provisions of the Act include requirements for annual registration, listing of devices, good manufacturing practice, labeling, and prohibitions against misbranding and adulteration. Please note: CDRH does not evaluate information related to contract liability warranties. We remind you, however, that device labeling must be truthful and not misleading.

If your device is classified (see above) into either class II (Special Controls) or class III (PMA), it may be subject to additional controls. Existing major regulations affecting your device can be found in the Code of Federal Regulations, Title 21, Parts 800 to 898. In addition, FDA may publish further announcements concerning your device in the Federal Register.

Product Certificates

FDA

FDA Home[3] Medical Devices[4] Databases[5]

510(k) Premarket Notification

CDRH SuperSearch

(510(k)[7]|DeNovo[8]|Registration & Listing[9] |Adverse Events[10] |Recalls[11]|PMA[12]|HDE[13]|Classification[14]|Standards[15]
CFR Title 21[16]|Radiation-Emitting Products[17]|X-Ray Assembler[18]|Medsun Reports[19]|CLIA[20]|TPLC[21]

New Search Back To Search Results

Device Classification Name	Patient Examination Glove, Specialty[22]
510(K) Number	K101822
Device Name	NON-STERILE POWDER-FREE BLUE NITRILE EXAMINATION GLOVES TESTED FOR USE WITH CHEMOTHERAPY DRUGS
Applicant	SGMP CO., LTD. 198 AVENUE DE LA D'EMERALD Sparks, NV 89434
Applicant Contact	Janna P Tucker
Correspondent	SGMP CO., LTD. 198 AVENUE DE LA D'EMERALD Sparks, NV 89434
Correspondent Contact	Janna P Tucker
Regulation Number	880.6250[23]
Classification Product Code	LZC[24]
Subsequent Product Code	LZA[25]
Date Received	06/30/2010
Decision Date	11/19/2010
Decision	Substantially Equivalent (SESE)
Regulation Medical Specialty	General Hospital
510k Review Panel	General Hospital
Summary	Summary[26]
Type	Traditional
Reviewed By Third Party	No
Combination Product	No

Links on this page:

1. http://www.addthis.com/bookmark.php?u508=true&v=152&username=fdamain
2. http://www.addthis.com/bookmark.php
3. https://www.fda.gov/
4. https://www.fda.gov/Medical-Devices
5. https://www.fda.gov/medical-devices/device-advice-comprehensive-regulatory-assistance/medical-device-databases
6. /scripts/cdrh/devicesatfda/index.cfm
7. /scripts/cdrh/cfdocs/cfPMN/pmn.cfm
8. /scripts/cdrh/cfdocs/cfpmn/denovo.cfm
9. /scripts/cdrh/cfdocs/cfRL/rl.cfm

CONFIDENTIAL

Product Certificates

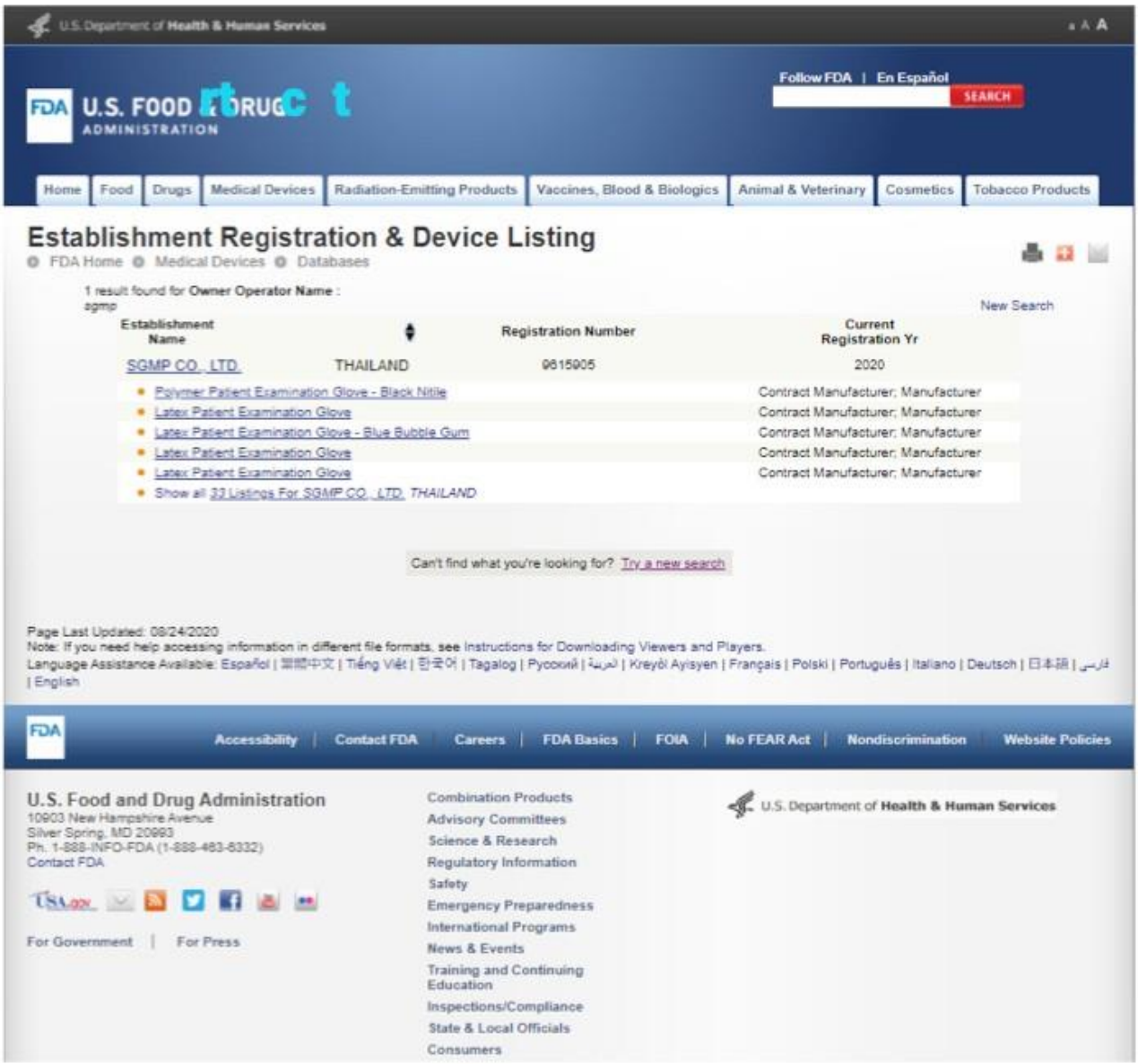

U.S. Department of Health & Human Services

FDA U.S. FOOD & DRUG ADMINISTRATION

Follow FDA | En Español

SEARCH

Home | Food | Drugs | Medical Devices | Radiation-Emitting Products | Vaccines, Blood & Biologics | Animal & Veterinary | Cosmetics | Tobacco Products

Establishment Registration & Device Listing

FDA Home > Medical Devices > Databases

1 result found for **Owner Operator Name** : agmp

New Search

Establishment Name		Registration Number	Current Registration Yr
SGMP CO., LTD.	THAILAND	9615905	2020
• Polymer Patient Examination Glove - Black Nitile			Contract Manufacturer; Manufacturer
• Latex Patient Examination Glove			Contract Manufacturer; Manufacturer
• Latex Patient Examination Glove - Blue Bubble Gum			Contract Manufacturer; Manufacturer
• Latex Patient Examination Glove			Contract Manufacturer; Manufacturer
• Latex Patient Examination Glove			Contract Manufacturer; Manufacturer
• Show all 33 Listings For SGMP CO., LTD. THAILAND			

Can't find what you're looking for? Try a new search

Page Last Updated: 08/24/2020
Note: If you need help accessing information in different file formats, see Instructions for Downloading Viewers and Players.
Language Assistance Available: Español | 繁體中文 | Tiếng Việt | 한국어 | Tagalog | Русский | العربية | Kreyòl Ayisyen | Français | Polski | Português | Italiano | Deutsch | 日本語 | فارسی | English

FDA | Accessibility | Contact FDA | Careers | FDA Basics | FOIA | No FEAR Act | Nondiscrimination | Website Policies

U.S. Food and Drug Administration
10903 New Hampshire Avenue
Silver Spring, MD 20993
Ph. 1-888-INFO-FDA (1-888-463-6332)
Contact FDA

USA.gov

For Government | For Press

Combination Products
Advisory Committees
Science & Research
Regulatory Information
Safety
Emergency Preparedness
International Programs
News & Events
Training and Continuing Education
Inspections/Compliance
State & Local Officials
Consumers

U.S. Department of Health & Human Services

CONFIDENTIAL

ZERTIFIKAT • CERTIFICATE • 認證書 • СЕРТИФИКАТ • CERTIFICADO • CERTIFICAT

America

CERTIFICATE

No. QS6 18 06 52111 004

Certificate Holder: SGMP Company Limited
181 Moo 6,Tambol Kampaengphet
Amphur Rattaphum,Songkhla Pro. 90180
THAILAND

Certification Mark:

Scope of Certificate: Design and Development, Production and Distribution of Non-sterile Powdered and Powder Free Examination Gloves

Standard(s): ISO 13485:2016

Regulatory Authority: Health Canada.
See attached for listing of specific regulatory requirements.

The Certification Body of TÜV SÜD America Inc. certifies that the quality management system of the manufacturer listed above has been audited against the stated criteria and found to conform to those criteria for the scope of certification listed. Validity of this certificate can be obtained by visiting the website
http://www.tuv-sud-america.com/us-en/resource-center/customer-support/certificate-finder

TÜV SÜD America Inc. is an MDSAP Recognized Auditing Organization.

DUNS No: 66-072-9989
Effective Date: 2018-06-02
Expiry Date: 2021-06-01

Manuel Bradaric
MHS Certification Manager

040527682893315

Page 1 of 2

UCB_F_12.02 2012-02

ZERTIFIKAT • CERTIFICATE • 認證證書 • СЕРТИФИКАТ • CERTIFICADO • CERTIFICAT

America

CERTIFICATE

No. QS6 18 06 52111 004

Certificate Holder: SGMP Company Limited
181 Moo 6,Tambol Kampaengphet
Amphur Rattaphum,Songkhla Pro. 90180
THAILAND

Certification Mark:

Scope of Certificate: Design and Development, Production and Distribution of Non-sterile Powdered and Powder Free Examination Gloves

Standard(s): ISO 13485:2016

Regulatory Authority: Health Canada.
See attached for listing of specific regulatory requirements.

The Certification Body of TÜV SÜD America Inc. certifies that the quality management system of the manufacturer listed above has been audited against the stated criteria and found to conform to those criteria for the scope of certification listed. Validity of this certificate can be obtained by visiting the website
http://www.tuv-sud-america.com/us-en/resource-center/customer-support/certificate-finder

TÜV SÜD America Inc. is an MDSAP Recognized Auditing Organization.

DUNS No: 66-072-9989
Effective Date: 2018-06-02
Expiry Date: 2021-06-01

Manuel Bradaric
MHS Certification Manager

Page 1 of 2

ZERTIFIKAT • CERTIFICATE • 認證證書 • СЕРТИФИКАТ • CERTIFICADO • CERTIFICAT

America

CERTIFICATE

No. QS5 18 06 52111 005

Certificate Holder: SGMP Company Limited
181 Moo 6,Tambol Kampaengphet
Amphur Rattaphum,Songkhla Pro. 90180
THAILAND

Certification Mark:

Scope of Certificate: Design and Development, Production and Distribution of Non-sterile Powdered and Powder Free Examination Gloves

Standard(s): ISO 9001:2015

The Certification Body of TÜV SÜD America Inc. certifies that the company mentioned above has established and is maintaining a quality management system that meets the requirements of the listed standards.

Report No.: M2930

Effective Date: 2018-06-13
Expiry Date: 2021-06-01

04052768289735

Manuel Bradaric
MHS Certification Manager

TÜV SÜD America Inc.
10 Centennial Drive
Peabody, MA 01960
USA

SCC Accredited CB-MS OCSM Accrédité CCN

UCB_F_12.04 2012-02

ZERTIFIKAT • CERTIFICATE • 認證證書 • СЕРТИФИКАТ • CERTIFICADO • CERTIFICAT

America

CERTIFICATE

No. QS6 18 06 52111 004

Audit/Certification Criteria

Canada

- **Medical Device Regulations SOR/98-282, Part 1**

Effective Date: 2018-06-02
Expiry Date: 2021-06-01

Manuel Bradaric
Certification Manager MHS

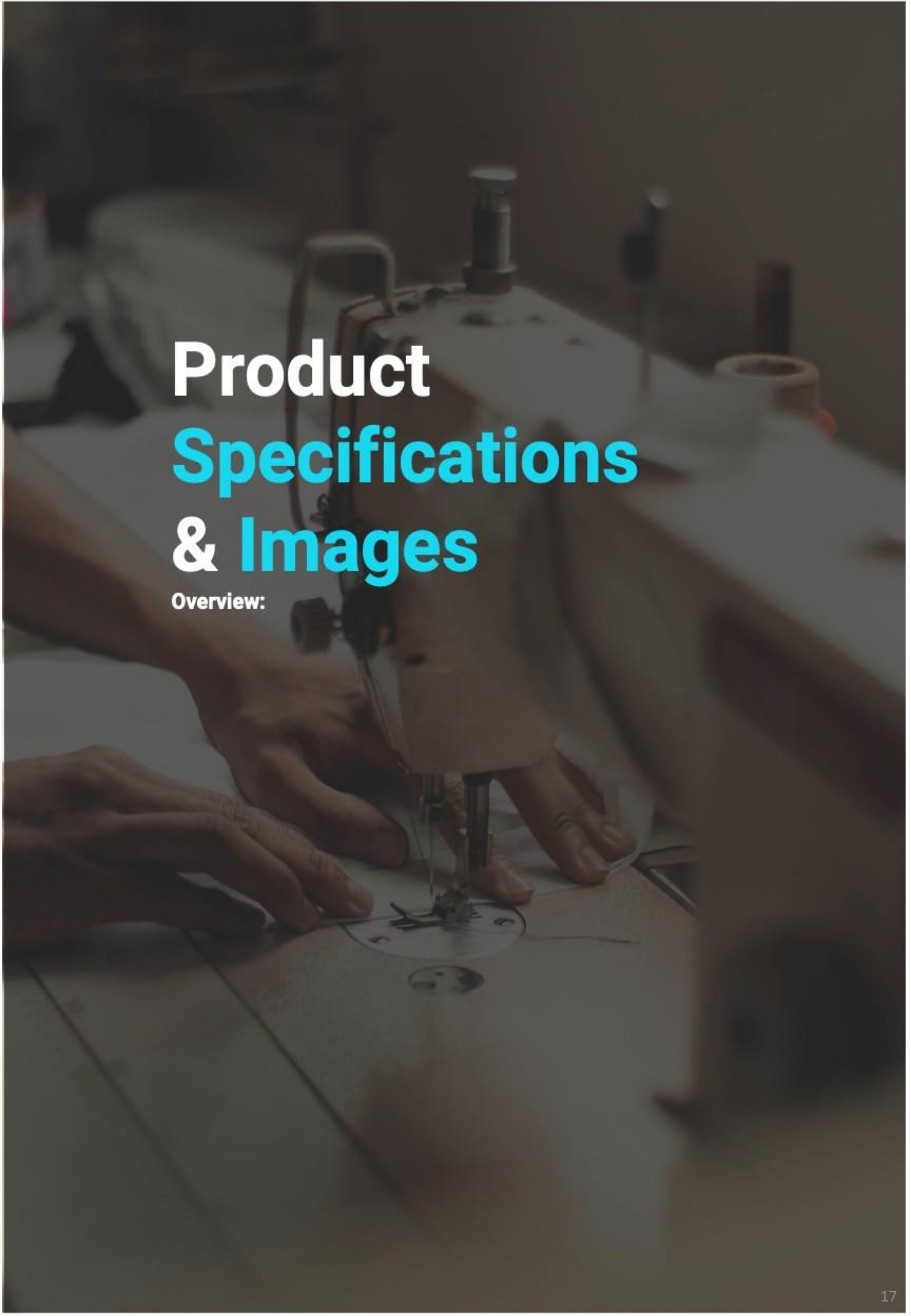

Product Specifications & Images

Overview:

CONFIDENTIALITY.

The parties hereto agree that each shall treat confidentially the terms and conditions of this Agreement and all information provided by each party to the other regarding its business and operations.

All confidential information provided by a party hereto shall be used by any other party hereto solely for the purpose of rendering or obtaining services pursuant to this Agreement and, except as may be required in carrying out this Agreement, shall not be disclosed to any third party without the prior consent of such providing party.

The foregoing shall not be applicable to any information that is publicly available when provided or thereafter becomes publicly available other than through a breach of this Agreement, or that is required to be disclosed by or to any bank examiner of the Custodian or any Sub custodian, any Regulatory Authority, any auditor of the parties hereto, or by judicial or administrative process or otherwise by Applicable Law.

Nitrile Glove

Powder Free

Specifications:

Nitrile Rubber (NBR)
Available in Blue,
White Micro
Textured Tips
Rimme
Origin: Thailand,

Standards & Compliance:

FDA 510(k), TH FDA, CE
EN 455 part 1, 2, 3 & 4 EN 1186, EN 13130, EN 420, EN 374 part 1, 2, 3 & 5

Product Description:

GAIA Produce Nitrile Gloves with smooth donning, fine fitting, light weight, and high resistance to tear with high resistance to chemical abrasiveness. Manufacture at 6 manufacturers.
manufactured to the same specifications.

Ordering Details:

MOQ: 100,000,000 pcs
FOB: Thailand
Price: Please Enquire

Packaging Details:

100 pcs per box
10 boxes per carton
Carton Size: 24 x 35 x 23 cm

CONFIDENTIAL –GAIA Corporation

MEDIHANDS
NITRIL-
Einmalhandschuhe
puderfrei
Hinweise zur Lagerung
• Trocken lagern
• Sonneneinstrahlung vermeiden
• Von Insekten fern halten
Hinweise
• Von scharfen Objekten fern halten, um Einstiche zu vermeiden
• Nach Gebrauch Handschuh nach innen kehren und sofort entsorgen
Hergestellt für: Medihands AG
von: GAIA Corporation (Thailand) Limited 712/1 TBI Building, Unit 502, 5th Floor, Soi Sukhumvit 26 and 28, Sukhumvit Road, Khlong Tan, Khlong Toei, Bangkok 10110, Thailand
LOT:
MFG:
EXP:
100 HANDSCHUHE NACH GEWICHT
CE 2777
Elektronik
Reinigung
Industrie
Kosmetik
Gastronomie
allgemeine Pflege
• für medizinische Zwecke geeignet
• nicht steril
• ideal für Links- und Rechtshänder
• zur einmaligen Anwendung
• guter Griff, texturiert
S WEISS
M BLAU
L GRÜN
XL SCHWARZ
CAT III
EN455-1
AQL (1.5)
ISO 13485
SA80000 POLICY
US-FDA-510 (K)
CE 2777
FOOD SAFE
EN374-1
EN374-2
EN374-4
EN374-5
Virus

REINZEICHNUNG
FARBEN
DRUCK
GRÖSSEN
CREATING IMAGES

Nitrile Gloves	OEM SPECIFICATIONS
	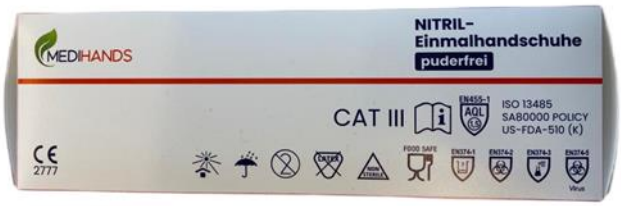
COMMON NAME (USED ON LABEL) Nitrile Examination Gloves Powder Free	CHEMICAL FAMILY Carboxylated Butadiene Acrylonitrile olymer Latex free
APPLICATION Medical and Food	TRADENAME & SYNONYM MEDIHANDS

SECTION 2: HAZARDOUS INGREDIENTS

HAZARDOUS COMPONENT	CAS #	%(WT)	TLV	PEL
N/A	N/A	N/A	N/A	N/A

PEL: Permissible Exposure Limit established by Occupational Safety and Health Administration (OSHA).

TLV: Threshold Limit Value established by the American Conference of Governmental Industrial Hygienists, 1987-1988.

SECTION 4: FIRST AID MEASURE

If reaction in the form of skin irritation is noticed, remove gloves immediately and wash affected part with saline water. If there is no relief, seek medical reactions.

SECTION 5: ACCIDENTAL RELEASE MEASURES

BIOCOMPATABILITY

The chemical formulation of the gloves and surface lubrication materials does not contain any substances normally known to be harmful to the user or to any person with whom the gloves come into contact.

MEDICAL CONDITIONS GENERALLY AGGRAVATED BY EXPOSURE

Nitrile Powder Free Gloves are not expected to cause any adverse health effects.

SECTION 6: HANDLING AND STORAGE

PRECAUTIONS TO BE TAKEN IN HANDLING AND STORAGE

Store in a dry, cool and ventilated area. Do not store above 104 °F (40 °C). Shield open box from direct sunlight, fluorescent lighting and x-rays. Improper storage will decrease usable life.

SECTION 7: EXPOSURE CONTROLS/ PERSONAL PROTECTION

EYE PROTECTION	SKIN PROTECTION
Not necessary under conditions of intended use.	Not necessary under conditions of intended use.

RESPIRATORY PROTECTION	VENTILATION
Not necessary under conditions of intended use.	Not necessary under conditions of intended use.

STEPS TO BE TAKEN IN CASE MATERIAL IS LEAKED OR SPILLED

These products are solid articles and are not subject to leaks or spills.

SECTION 8: PHYSICAL AND CHEMICAL PROPERTIES

APPEARANCE/ ODOR

Ambidextrous, Beaded Cuff, Micro-textured, Chlorinated, Powder Free, Coated with Colloidal Oatmeal USP Skin Protectant, Dawn Blue.

DIMENSION		SMALL	MEDIUM	LARGE	X-LARGE
Length (mm)	Minimum 240 (same for all)				
Width (mm)		80 ± 10	95 ± 10	110 ± 10	111 min
THICKNESS (mm) – SINGLE WALL MEASUREMENT (same for all)					
Finger (mm)	0.11 min				
Palm (mm)	0.08 ± min				

TENSILE PROPERTIES	UNAGED	AGED
Tensile Strength (Mpa)	Min. 18.0 MPa	Min. 16.0 MPa
Ultimate Elongation (%)	Min. 500%	Min. 400%

SECTION 9: STABILITY AND REACTIVITY

BOILING POINT	VAPOR PRESSURE (mm Hg)	VAPOR DENSITY (air=1)
N/A	N/A	N/A
SPECIFIC GRAVITY (water=1)	SOLUBILITY IN WATER	% VOLATILE BY VOLUME
N/A	Insoluble	N/A

EVAPORATION RATE	VISCOSITY
N/A	N/A

SECTION 10: TOXICOLOGICAL INFORMATION

STABILITY	CONDITIONS TO AVOID
Stable.	Does not apply.

INCOMPATABILITY (MATERIALS TO AVOID)

High polar solvent like methyl ethyl ketone, acetone.

HAZARDOUS DECOMPOSITION PRODUCTS

In a fire, these products may produce a black smoke. Carbon Dioxide, Carbon Monoxide, Oxides of Nitrogen, aromatic/aliphatic hydrocarbons.

HAZARDOUS POLYMERIZATION

Will not occur.

SECTION 11: DISPOSAL CONSIDERATION

WASTE DISPOSAL METHOD Consult current local, state and federal regulations for proper disposal methods.

SECTION 12: OTHER INFORMATION

RECOMMENDED USE AND RESTRICTION

The Nitrile Powder Free Gloves is a Single Use device.

Source in Asia

Nitrile Rubber Gloves

MEDIHANDS

Product Specification
and Images

MEDIHANDS

CERTIFICATIONS

MEDIHANDS

bsi. ISO 9001:2015 Quality Management

bsi. ISO 13485 Medical Devices Quality Management

EN ISO 374-1:2016/Type B

EN 374-2

EN374-4

EN ISO 374-5

CE

DEPARTMENT OF HEALTH & HUMAN SERVICES · USA

FDA

EN 455

ASTM

FDA

Product Specifications

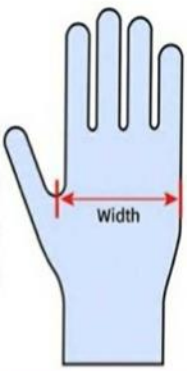

Product Properties : Nitrile Powder Free Non-Sterile					
Type	Powder Free				
Specification	Non-Sterile, Ambidextrous, Disposable				
Cuff	Beaded				
Surface	Smooth/Textured				
Color	Blue				
Main Material	100% Synthetic Nitrile				
Parameter					
1. Silicone-Free			2. Chloride Max. 0.85 mg./g.		
3. Amide Non Detectable			4. DOP Non Detectable		
Type	**Protein Content**		**Powder Control**		
Powder Free	<= 50 µg/g		<= 2mg/glove		
Tensile	**ASTM**		**EN455**		
Before Aging	>= 14 Mpa		-		
After Aging	>= 14 Mpa		-		
Elongination	**ASTM**		**EN455**		
Before Aging	>= 400%		-		
After Aging	>= 350%		-		
Dimension	**XS**	**S**	**M**	**L**	**XL**
Width (mm.)	60-80	70-90	85-105	100-120	110-130
Length (mm.)	ASTM		Minimum for all size 230 mm.		
	EN455		Minimum for all size 240 mm.		
Thickness (mm.)	Cuff		Min. 0.05 mm.		
	Palm		Min. 0.05 mm.		
	Finger		Min. 0.05 mm.		

Carton Dimension

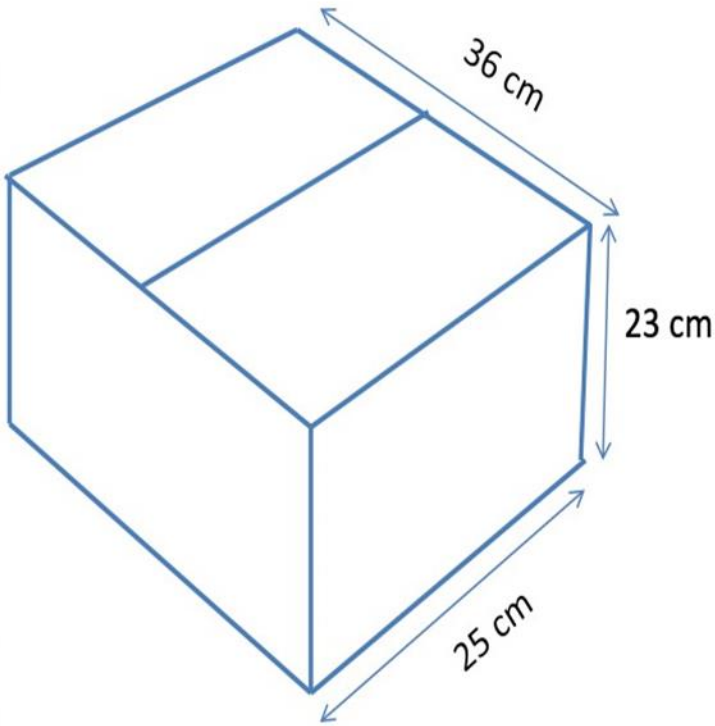

1 Carton = 10 Boxes

Weight:

XS	= 3.5 Kg.	L	= 5.0 Kg.
S	= 4.0 Kg.	XL	= 5.5 Kg.
M	= 4.5 Kg.		

NITRILE EXMINATION GLOVES POWDER FREE

Product Description:

GAIA Produce Nitrile Gloves with smooth donning, fine fitting, light weight,

and high resistance to tear with high

Note:

1. Not suitable for harmful

Specifications:

Nitrile Rubber (NBR) Available in Blue,

White Micro

Textured Tips

Rimme Origin: Thailand,Malaysia

Standards & Compliance:

FDA 510(k), TH FDA, CE
EN 455 part 1, 2, 3 & 4 EN 1186, EN 13130, EN 420, EN 374 part 1, 2, 3 & 5

Ordering Details:

MOQ: 100,000,000 pcs FOB: Thailand
Price: Please Enquire

Packaging Details:

100 pcs per box
10 boxes per carton
Carton Size: 24 x 35 x 23 cm

MEDIHANDS

MEDIHANDS

OEM SPECIFICATIONS

CHEMICAL FAMILY
Carboxylated Butadiene Acrylonitrile olymer Latex free

TRADENAME & SYNONYM MSCS Blue Nitrile Gloves

HAZARDOUS COMPONENT	CAS #	%(WT)	TLV	PEL
N/A	N/A	N/A	N/A	N/A

PEL: Permissible Exposure Limit established by Occupational Safety and Health Administration (OSHA).

TLV: Threshold Limit Value established by the American Conference of Governmental Industrial Hygienists, 1987-1988.

If reaction in the form of skin irritation is noticed, remove gloves immediately and wash affected part with saline water. If there is no relief, seek medical reactions.

BIOCOMPATABILITY

The chemical formulation of the gloves and surface lubrication materials does not contain any substances normally known to be harmful to the user or to any person with whom the gloves come into contact.

MEDICAL CONDITIONS GENERALLY AGGRAVATED BY EXPOSURE

Nitrile Powder Free Gloves are not expected to cause any adverse health effects.

PRECAUTIONS TO BE TAKEN IN HANDLING AND STORAGE

Store in a dry, cool and ventilated area. Do not store above 104 °F (40 °C). Shield open box from direct sunlight, fluorescent lighting and x-rays. Improper storage will decrease usable life.

EYE PROTECTION	SKIN PROTECTION
Not necessary under conditions of intended use.	Not necessary under conditions of intended use.

RESPIRATORY PROTECTION	VENTILATION
Not necessary under conditions of intended use.	Not necessary under conditions of intended use.

STEPS TO BE TAKEN IN CASE MATERIAL IS LEAKED OR SPILLED
These products are solid articles and are not subject to leaks or spills.

APPEARANCE/ ODOR

Ambidextrous, Beaded Cuff, Micro-textured, Chlorinated, Powder Free, Coated with Colloidal Oatmeal USP Skin Protectant, Dawn Blue.

DIMENSION		SMALL	MEDIUM	LARGE	X-LARGE
Length (mm)	Minimum 240 (same for all)				
Width (mm)		80 ± 10	95 ± 10	110 ± 10	111 min
THICKNESS (mm) – SINGLE WALL MEASUREMENT (same for all)					
Finger (mm)	0.11 min				
Palm (mm)	0.08 ± min				

TENSILE PROPERTIES	UNAGED	AGED
Tensile Strength (Mpa)	Min. 18.0 MPa	Min. 16.0 MPa
Ultimate Elongation (%)	Min. 500%	Min. 400%

BOILING POINT	VAPOR PRESSURE (mm Hg)	VAPOR DENSITY (air=1)
N/A	N/A	N/A
SPECIFIC GRAVITY (water=1)	SOLUBILITY IN WATER	% VOLATILE BY VOLUME
N/A	Insoluble	N/A

EVAPORATION RATE	VISCOSITY
N/A	N/A

STABILITY Stable.	CONDITIONS TO AVOID Does not apply.
INCOMPATABILITY (MATERIALS TO AVOID) High polar solvent like methyl ethyl ketone, acetone.	
HAZARDOUS DECOMPOSITION PRODUCTS In a fire, these products may produce a black smoke. Carbon Dioxide, Carbon Monoxide, Oxides of Nitrogen, aromatic/aliphatic hydrocarbons.	
HAZARDOUS POLYMERIZATION Will not occur.	
WASTE DISPOSAL METHOD Consult current local, state and federal regulations for proper disposal methods.	
RECOMMENDED USE AND RESTRICTION The Nitrile Powder Free Gloves is a Single Use device.	

GAIA Corporation (Thailand) Ltd.

712 / 1 TBI Building, Unit 502, 5th Floor, Soi Sukhumvit 26 and 28, Sukhumvit Rd., Khlong Tan, Khlong Toei, Bangkok 10110
TAX ID 0105553132320
TEL+66-02-004-4919
Mobile+66-99-301-9999
https://gaiacorp.com/en/
ozawa@gaiacorp.com

Weight Breakdown

Weight for order:

100 gloves = 1 Box
10 Box = 1 Carton 23 x 35 x 24 cm
60 Cartons = 1 Pallet
Pallet type/Euro = 1200 x 800mm

Calculations:
Quantity / 60 = Pallets
Cartons weight x 60 (Max Cartons on pallet) = KG/Pallet

Order & Pallet Weight:

- 12000 x Small = 4.7 KG/Carton, 282 KG/Pallet (200 Pallets) 200 Pallets/56,400 KG
- 41000 x Medium = 5.6 KG/Carton, 336 KG/Pallet (684 Pallets) 648 Pallets/229,824 KG
- 41000 x Large = 6.3 KG/Carton, 378 KG/Pallet (684 Pallets) 648 Pallets/258,552 KG
- 12000 x X-Large = 7.1 KG/Carton, 426 KG/Pallet (200 Pallets) 200 Pallets/85,200 KG

Sub weight: 629,976 KG

Weight Plus Pallet weight (Euro Pallet 25KG):

200 Pallets/56,400 KG + 5000 KG (Pallet) = 61,400 KG
648 Pallets/229,824 KG + 16,200 KG (Pallet) = 246,024 KG
648 Pallets/258,552 KG + 16,200 KG (Pallet) = 275,952 KG
200 Pallets/85,200 KG + 5000 KG (Pallet) = 90,200 KG

Total Weight: 673,576 KG

---------- END OF DOCUMENT --------

Loading Information

100 gloves = 1 Box

10 Boxes = 1 Carton W240㎜×L350㎜× H 230㎜

CASE 1 : Pallet size 1050 ㎜ × 1100 ㎜

	Number of stacks per pallet (Cartons per pallet)	Height per pallet	Loading information quantity or weight	Type	Per carton	Per pallet	Per container 40 ft HC
1	10 stacks (12 cartons × 10 stacks = 120 cartons/pallet)	2,300 ㎜ (230 ㎜×10 stacks) + pallet height	quantity	Container	N/A	N/A	1
				Pallet	N/A	1	20
				Carton	1	120	2,400
				Box	10	1,200	24,000
			weight	S size	4.7kg	564.0kg	11,280.0kg
				M size	5.6kg	672.0kg	13,440.0kg
				L size	6.3kg	756.0kg	15,120.0kg
				XL size	7.1kg	852.0kg	17,040.0kg
2	9 stacks (12 cartons × 9 stacks = 108 cartons/pallet)	2,070 ㎜ (230 ㎜×9 stacks) + pallet height	quantity	Container	N/A	N/A	1
				Pallet	N/A	1	20
				Carton	1	108	2,160
				Box	10	1,080	21,600
			weight	S size	4.7kg	507.6kg	10,152.0kg
				M size	5.6kg	604.8kg	12,096.0kg
				L size	6.3kg	680.4kg	13,608.0kg
				XL size	7.1kg	766.8kg	15,336.0kg
3	8 stacks (12 cartons × 8 stacks = 96 cartons/pallet)	1,840 ㎜ (230 ㎜×8 stacks) + pallet height	quantity	Container	N/A	N/A	1
				Pallet	N/A	1	20
				Carton	1	96	1,920
				Box	10	960	19,200
			weight	S size	4.7kg	451.2kg	9,024.0kg
				M size	5.6kg	537.6kg	10,752.0kg
				L size	6.3kg	604.8kg	12,096.0kg
				XL size	7.1kg	681.6kg	13,632.0kg
4	7 stacks (12 cartons × 7 stacks = 84 cartons/pallet)	1,610 ㎜ (230 ㎜×7 stacks) + pallet height	quantity	Container	N/A	N/A	1
				Pallet	N/A	1	20
				Carton	1	84	1,680
				Box	10	840	16,800
			weight	S size	4.7kg	394.8kg	7,896.0kg
				M size	5.6kg	470.4kg	9,408.0kg
				L size	6.3kg	529.2kg	10,584.0kg
				XL size	7.1kg	596.4kg	11,928.0kg
5	6 stacks (12 cartons × 6 stacks = 72 cartons/pallet)	1,380 ㎜ (230 ㎜×6 stacks) + pallet height	quantity	Container	N/A	N/A	1
				Pallet	N/A	1	20
				Carton	1	72	1,440
				Box	10	720	14,400
			weight	S size	4.7kg	338.4kg	6,768.0kg
				M size	5.6kg	403.2kg	8,064.0kg
				L size	6.3kg	453.6kg	9,072.0kg
				XL size	7.1kg	511.2kg	10,224.0kg
6	5 stacks (12 cartons × 5 stacks = 72 cartons/pallet)	1,150 ㎜ (230 ㎜×5 stacks) + pallet height	quantity	Container	N/A	N/A	1
				Pallet	N/A	1	20
				Carton	1	60	1,200
				Box	10	600	12,000
			weight	S size	4.7kg	282.0kg	5,640.0kg
				M size	5.6kg	336.0kg	6,720.0kg
				L size	6.3kg	378.0kg	7,560.0kg
				XL size	7.1kg	426.0kg	8,520.0kg

Note: Carton weight only

100 gloves = 1 Box

10 Boxes = 1 Carton W240㎜×L350㎜× H 230㎜

CASE 2 : Pallet size 800 ㎜ × 1200 ㎜ (Euro Pallet)

	Number of stacks per pallet (Cartons per pallet)	Height per pallet	Loading information quantity or weight	Type	Per carton	Per pallet	Per container 40 ft HC
1	10 stacks (10 cartons × 10 stacks = 100 cartons/pallet)	2,300 ㎜ (230 ㎜×10 stacks) + pallet height	quantity	Container	N/A	N/A	1
				Pallet	N/A	1	24
				Carton	1	100	2,400
				Box	10	1,000	24,000
			weight	S size	4.7kg	470.0kg	11,280.0kg
				M size	5.6kg	560.0kg	13,440.0kg
				L size	6.3kg	630.0kg	15,120.0kg
				XL size	7.1kg	710.0kg	17,040.0kg
2	9 stacks (10 cartons × 9 stacks = 90 cartons/pallet)	2,070 ㎜ (230 ㎜×9 stacks) + pallet height	quantity	Container	N/A	N/A	1
				Pallet	N/A	1	24
				Carton	1	90	2,160
				Box	10	900	21,600
			weight	S size	4.7kg	423.0kg	10,152.0kg
				M size	5.6kg	504.0kg	12,096.0kg
				L size	6.3kg	567.0kg	13,608.0kg
				XL size	7.1kg	639.0kg	15,336.0kg
3	8 stacks (10 cartons × 8 stacks = 80 cartons/pallet)	1,840 ㎜ (230 ㎜×8 stacks) + pallet height	quantity	Container	N/A	N/A	1
				Pallet	N/A	1	24
				Carton	1	80	1,920
				Box	10	800	19,200
			weight	S size	4.7kg	376.0kg	9,024.0kg
				M size	5.6kg	448.0kg	10,752.0kg
				L size	6.3kg	504.0kg	12,096.0kg
				XL size	7.1kg	568.0kg	13,632.0kg
4	7 stacks (10 cartons × 7 stacks = 70 cartons/pallet)	1,610 ㎜ (230 ㎜×7 stacks) + pallet height	quantity	Container	N/A	N/A	1
				Pallet	N/A	1	24
				Carton	1	70	1,680
				Box	10	700	16,800
			weight	S size	4.7kg	329.0kg	7,896.0kg
				M size	5.6kg	392.0kg	9,408.0kg
				L size	6.3kg	441.0kg	10,584.0kg
				XL size	7.1kg	497.0kg	11,928.0kg
5	6 stacks (10 cartons × 6 stacks = 60 cartons/pallet)	1,380 ㎜ (230 ㎜×6 stacks) + pallet height	quantity	Container	N/A	N/A	1
				Pallet	N/A	1	24
				Carton	1	60	1,440
				Box	10	600	14,400
			weight	S size	4.7kg	282.0kg	6,768.0kg
				M size	5.6kg	336.0kg	8,064.0kg
				L size	6.3kg	378.0kg	9,072.0kg
				XL size	7.1kg	426.0kg	10,224.0kg
6	5 stacks (10 cartons × 5 stacks = 50 cartons/pallet)	1,150 ㎜ (230 ㎜×5 stacks) + pallet height	quantity	Container	N/A	N/A	1
				Pallet	N/A	1	24
				Carton	1	50	1,200
				Box	10	500	12,000
			weight	S size	4.7kg	235.0kg	5,640.0kg
				M size	5.6kg	280.0kg	6,720.0kg
				L size	6.3kg	315.0kg	7,560.0kg
				XL size	7.1kg	355.0kg	8,520.0kg

Note: Carton weight only

100 gloves = 1 Box
10 Boxes = 1 Carton W240㎜×L350㎜× H 230㎜

CASE 3 : 1 Container: 3,267Cartons, Without pallet

(1) Quantity

1 Container: 3,267 (9×33×11) cartons, 32,670 boxes

(2) Weight

S size: 4.7kg/carton, 15,354.9kg/container
M size: 5.6kg/carton, 18,295.2kg/container
L size: 6.3kg/carton, 20,582.1kg/container
XL size: 7.1kg/carton, 23,195.7kg/container

About Dry Container

Type		20' Dry	40' Dry	40' High Cube
Internal Dimension	Length	5,898 ㎜	12,032 ㎜	12,032 ㎜
	Width	2,352 ㎜	2,352 ㎜	2,352 ㎜
	Height	2,390 ㎜	2,390 ㎜	2,691 ㎜
	Interio Capacity	33.0 ㎥	67.5 ㎥	76.2 ㎥
Payload		21,780 kg	26,740 kg	26,560 kg

Container Stuffing Report

Following cargo shall be loaded in 1 * Container - 40' DC with your ref. YU-NRBPF

Cargo name	Length	Width	Height	Weight	Quantity	Colour
Nitrile Carton	49 cm	34 cm	40.5 cm	4.9 kg	800 / 800	
Total				3920 kg	800	

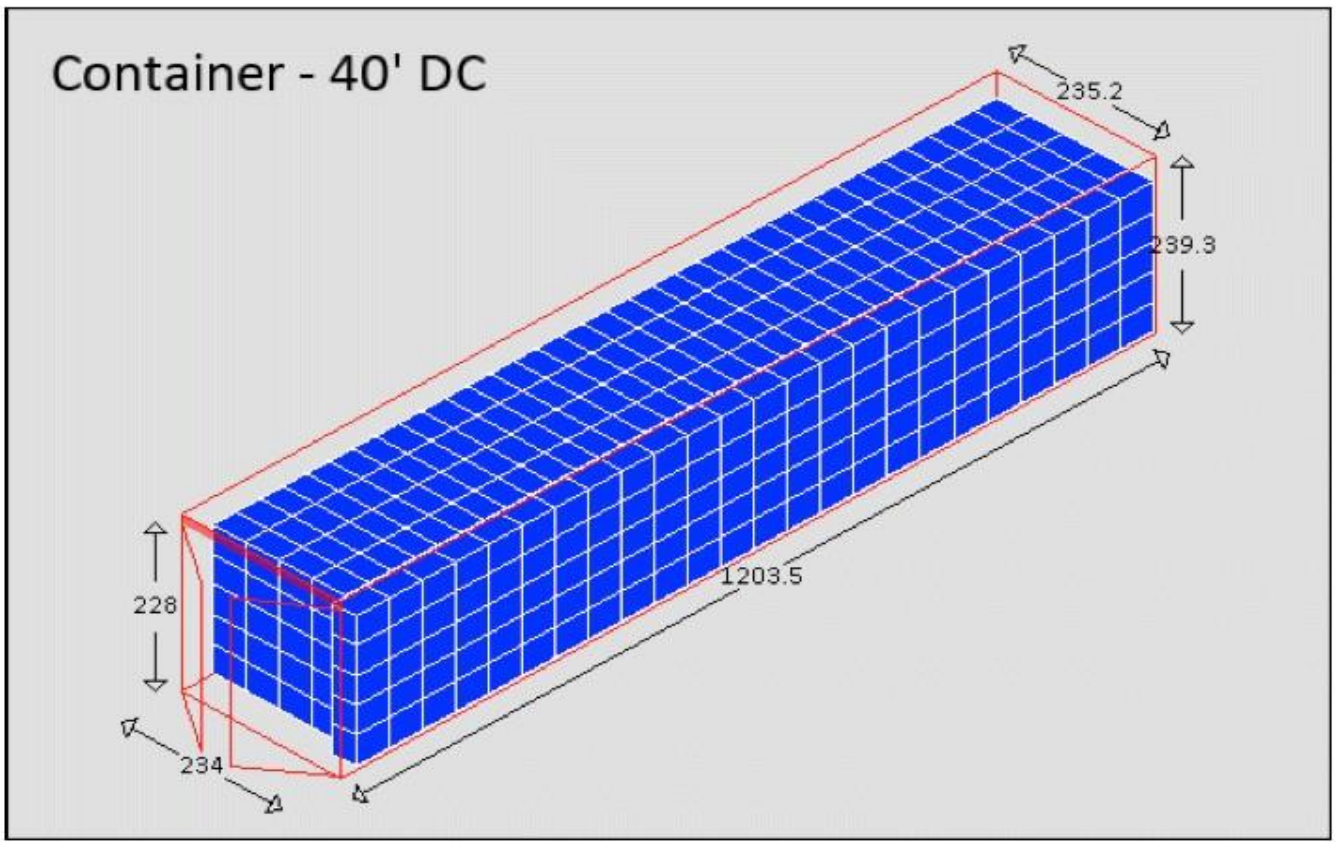

Full loading list

Group	Equipment name	Name	PCS	Weight total	Lenght	Width	Height
1	Container - 40' DC	Nitrile Carton	800	3920	49	34	40.5

Equipment : Container - 40' DC

Cargo name	Pieces loading	Pieces total
Nitrile Carton	800	800

	Total	Maximum
Weight (payload) in KG	3920	28800
Cubic Meter	53.978	67.737
Load centimeter	1176	1203.5
Pieces	800	

Container Stuffing Report

PIER2PIER.COM

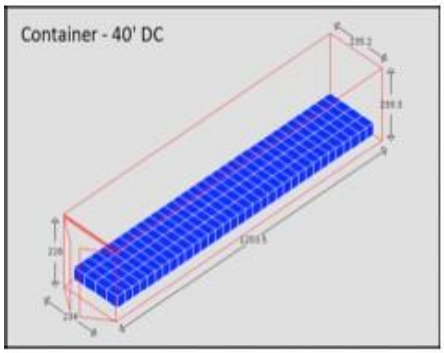

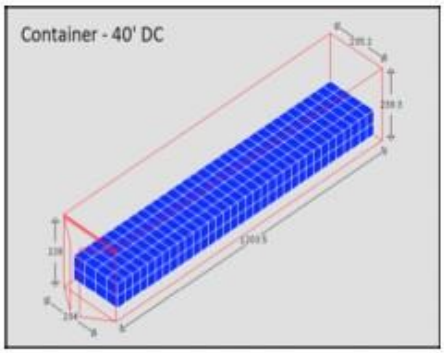

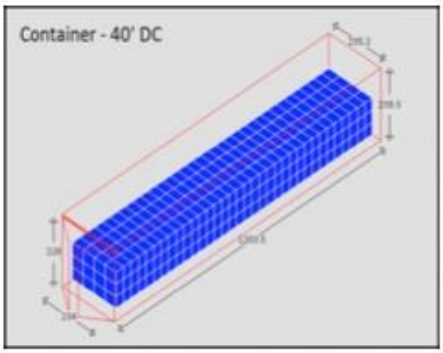

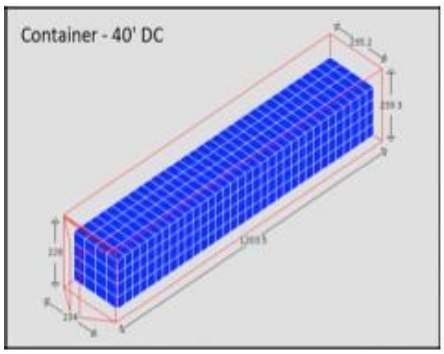

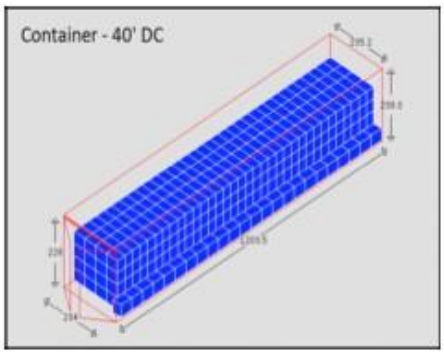

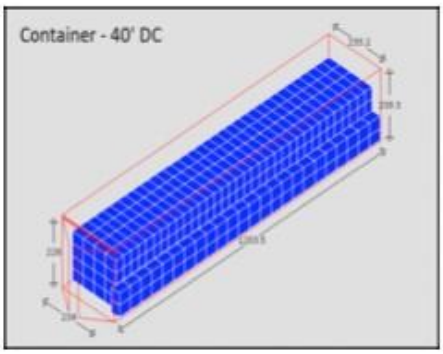

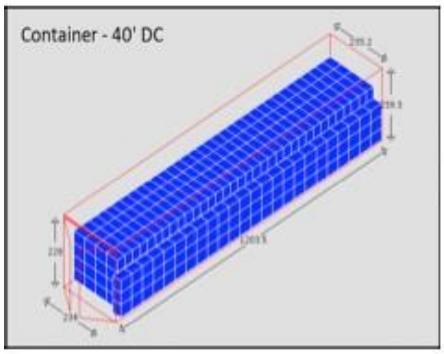

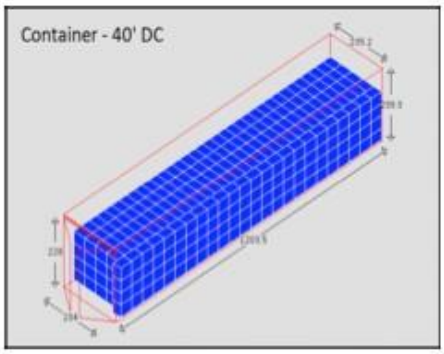

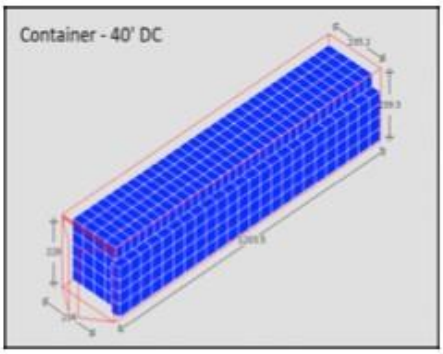

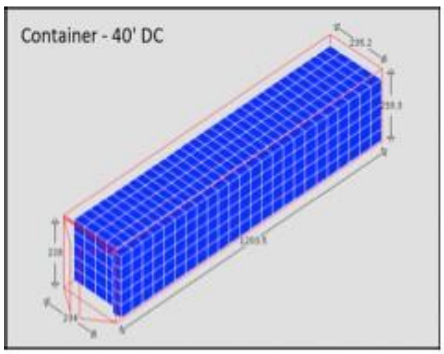

Identification / Model No(s): Nitrile Glove

Sample Receiving date: 2020-06-11

Testing Period: 2020-06-11 to 2020-07-02

Delivery condition: *Apparent good, Samples tested as received*

Test Specification:	*Test result:*
1. EN 455-1: 2000: Requirements for freedom from holes	PASS
2. EN 455-2: 2015: Physical properties test;	
- Dimension test	PASS
- Force at break test	PASS
3. EN 455-3: 2015 (E), Annex A : Proteins extraction by aqueous	Refer to result page
4. US FDA 21 CFR 177.2600 (Rubber Articles) - Determination of Amount of Extractives	PASS

Other Information:

Grade: MEDICAL GRADE

Countr\ of Origin: THAILAND

For and on behalf of
TÜV Rheinland Thailand Ltd.

2020-07-31 Wilawan Sriphrom / Manager

Date *Name/Position*

Test result is drawn according to the kind and extent of tests performed. This test report relates to the above mentioned Test sample. Without permission of the test center this test report is not permitted to be duplicated in extracts. This test report does not entitle to carry any safety mark on this or similar products.

Sampling Information:

Inspection Method:	No inspection, submitted sample by client
Inspection level:	N/A
AQL:	N/A
Sample size:	N/A

Material list:

Material No.	Material	Color	Location
M001	Nitrile Glove	Purple	Size S
M002	Nitrile Glove	Blue	Size M
M003	Nitrile Glove	Blue	Size L
M004	Nitrile Glove	Blue	Size XL

Test method: With reference to EN 455-1: 2000

Test result:

Gloves Size	Tested samples	No. of samples for Non-compliance	Conclusion
S	200 pcs.	1	Pass
M	200 pcs.	0	Pass
L	200 pcs.	0	Pass
XL	200 pcs.	0	Pass

Remark:

1. All samples were selected and supplied by the client.
2. The batch size of the gloves supplied was not stated by the client. In accordance with BS EN 455-1, a batch size between 35,001 to 150,000 was chosen, and therefore 50 gloves per stage were tested for perforations using General Inspection Level I at an AQL of 1.5%. with reference to table;

Stage No.	Cumulative no. tested	Accept	Reject
First	50	0	4
Second	100	1	6
Third	150	3	8
Fourth	200	5	9
Fifth	250	9	19

NSC – TISI – TIS 17025
TESTING 0298
TUV Rheinland Thailand Ltd.
TÜVRheinland®
Precisely Right.

Test No.:	T001		T002	
Material No.:	M001		M002	
Tested no.	Length (mm)	Width (mm)	Length (mm)	Width (mm)
1	246	85	244	94
2	246	86	244	94
3	245	85	246	94
4	246	85	246	94
5	245	85	245	94
6	245	85	244	93
7	245	84	245	94
8	245	85	245	94
9	245	85	244	94
10	244	82	244	94
11	245	85	244	94
12	243	85	244	95
13	244	85	244	94
Median result	245	85	245	94
Conclusion	Pass	Pass	Pass	Pass

Test No.:	T003		T004	
Material No.:	M003		M004	
Tested no.	Length (mm)	Width (mm)	Length (mm)	Width (mm)
1	245	110	245	116
2	246	110	244	116
3	245	110	245	119
4	245	110	244	116
5	245	110	245	116
6	245	110	245	115
7	245	111	245	116
8	246	110	244	117
9	245	110	245	116
10	246	110	245	116
11	245	110	245	116
12	245	110	245	116
13	245	111	245	116
Median result	245	110	245	116
Conclusion	Pass	Pass	Pass	Pass

Abbreviation: mm denotes millimeter

Remark: Dimension limit reference to table

Size	Median length (mm)	Median width (mm)
Extra small	≥ 240	≤ 80
Small		80±10
Medium		95±10
Large		110±10
Extra large		≥ 110

Force at break

Test method: EN 455-2: 2015

Test results:

Test No.	T001		T002	
Material No.	M001		M002	
Tested no.	Force at break Before ageing (N)	Force at break After ageing (N)	Force at break Before ageing (N)	Force at break After ageing (N)
1	6.31	6.33	10.11	10.98
2	7.22	6.81	9.45	8.67
3	6.47	5.92	9.75	10.57
4	7.46	6.72	8.33	9.41
5	5.56	5.35	10.80	8.94
6	5.47	5.93	8.48	10.75
7	6.18	6.70	8.80	9.46
8	6.32	4.80	10.00	8.65
9	5.72	6.21	9.95	9.83
10	6.71	5.87	9.12	9.58
11	6.45	6.68	9.11	8.90
12	5.87	5.95	11.02	8.40
13	6.53	6.52	8.97	10.54
Median result	6.33	6.14	9.53	9.59
Conclusion	Pass	Pass	Pass	Pass

Test No.	T003		T004	
Material No.	M003		M004	
Tested no.	Force at break Before ageing (N)	Force at break After ageing (N)	Force at break Before ageing (N)	Force at break After ageing (N)
1	99.13	7.97	6.71	5.20
2	7.32	7.32	7.37	5.83
3	7.15	7060	6.57	5.49
4	8.16	7085	7.70	5.37
5	9.04	7072	7.16	5.57
6	8.59	7.84	6.40	5.34
7	7.86	7.33	7.70	4.48
8	8.33	8.29	5.73	4.68
9	7.74	7.39	7.05	5.85
10	9.65	9.11	7.58	4.45
11	7.89	9.26	7.27	5.33
12	7.84	6.87	6.35	4.58
13	9.59	7.73	8.26	5.73
Median result	8.33	7.87	7.06	5.22
Conclusion	Pass	Pass	Pass	Pass

Abbreviation: N denotes Newton

Remark:

1. Median values of force at break

Force at Break (newton)		
a)	b)	c)
≥ 9.0	≥ 6.0	≥ 3.0

a) Requirements for all surgical gloves

b) Requirements for all examination gloves, except gloves made from thermoplastic materials (e.g. Polyvinylchloride, Polyethylene)

c) Requirements for gloves made from thermoplastic materials (e.g. Polyvinylchloride, Polyethylene)

Proteins extraction

Test method: With reference to EN 455-3: 2015 (E), Annex A.

Test result:

Test No.	Material No.	**Test parameter**	**Unit**	**MDL**	**Test result**
T001	M001	Proteins	µg/g	3	n.d.
T002	M002	Proteins	µg/g	3	n.d.
T003	M003	Proteins	µg/g	3	n.d.
T004	M004	Proteins	µg/g	3	n.d.

Abbreviation: µg/g denotes Microgram per gram

MDL denotes Method Detection Limit

Remark: The leachable protein level shall be "As Low As Reasonable Practicable" (ALARP)

US FDA 21 CFR 177.2600 (Rubber Articles) – Determination of Amount of Extractives

Test Method: With reference to US FDA 21 CFR 177.2600.

For use in contact with aqueous foods:

Extractants	Test Condition	RL ($mg/inch^2$)	Result ($mg/inch^2$)	Permissible Limit ($mg/inch^2$)
			M001	
Distilled Water	Reflux temperature for 7 hours	0.1	0.5	20
	Succeeding 2 hours of extraction	0.1	n.d.	1
Comment	--	--	Pass	--

For use in contact with fatty foods:

Extractants	Test Condition	RL ($mg/inch^2$)	Result ($mg/inch^2$)	Permissible Limit ($mg/inch^2$)
			M001	
n-Hexane	Reflux temperature for 7 hours	0.1	0.2	175
	Succeeding 2 hours of extraction	0.1	n.d.	4
Comment	--	--	Pass	--

NSC – TISI – TIS 17025
TESTING 0298
TUV Rheinland Thailand Ltd.
TÜVRheinland®
Precisely Right.

For use in contact with aqueous foods:

Extractants	Test Condition	RL (mg/inch²)	Result (mg/inch²) M002	Permissible Limit (mg/inch²)
Distilled Water	Reflux temperature for 7 hours	0.1	0.7	20
	Succeeding 2 hours of extraction	0.1	0.2	1
Comment	--	--	Pass	--

For use in contact with fatty foods:

Extractants	Test Condition	RL (mg/inch²)	Result (mg/inch²) M002	Permissible Limit (mg/inch²)
n-Hexane	Reflux temperature for 7 hours	0.1	0.4	175
	Succeeding 2 hours of extraction	0.1	n.d.	4
Comment	--	--	Pass	--

For use in contact with aqueous foods:

Extractants	Test Condition	RL (mg/inch²)	Result (mg/inch²) M003	Permissible Limit (mg/inch²)
Distilled Water	Reflux temperature for 7 hours	0.1	0.7	20
	Succeeding 2 hours of extraction	0.1	n.d.	1
Comment	--	--	Pass	--

For use in contact with fatty foods:

Extractants	Test Condition	RL (mg/inch²)	Result (mg/inch²) M003	Permissible Limit (mg/inch²)
n-Hexane	Reflux temperature for 7 hours	0.1	0.4	175
	Succeeding 2 hours of extraction	0.1	n.d.	4
Comment	--	--	Pass	--

For use in contact with aqueous foods:

Extractants	Test Condition	RL (mg/inch²)	Result (mg/inch²) M004	Permissible Limit (mg/inch²)
Distilled Water	Reflux temperature for 7 hours	0.1	0.8	20
	Succeeding 2 hours of extraction	0.1	n.d.	1
Comment	--	--	Pass	--

For use in contact with fatty foods:

Extractants	Test Condition	RL (mg/inch²)	Result (mg/inch²) M004	Permissible Limit (mg/inch²)
n-Hexane	Reflux temperature for 7 hours	0.1	0.4	175
	Succeeding 2 hours of extraction	0.1	n.d.	4
Comment	--	--	Pass	--

Abbreviation: n.d. denotes Not Detected (<RL)
RL denotes Reporting Limit
mg/inch² denotes Milligram per square inch

M001 – Size S

M002 – Size M

M003 – Size L

M004 – Size XL

- END -

MEDIHANDS
Thank you

GAIA CORPORATION

GAIA Corporation (Thailand) Ltd
712 / 1 TBI Building, Unit 502, 5th Floor,
Soi Sukhumvit 26 and 28, Sukhumvit Rd., Khlong Tan,
Khlong Toei, Bangkok 10110 Thailand

TEL:+66-2-120-6328

www.gaiacorp.com/en/ | info@gaiacorp.com

GAIA Corporation (Japan) Ltd
6F-3-2-4 Shiomidai,Isogo,Yokohama 235-0022
Japan